WE RESERVE ALL RIGHTS IN THIS DOCUMENT AND IN THE INFORMATION CONTAINED THERIN. REPRODUCTION, USE OR DISCLOSURE TO THIRD PARTIES WITHOUT EXPRESS AUTHORITY IS STRICTLY FORBIDDEN

© vetropack 2000

FUER DIESES DOKUMENT UND DEN DARIN DARGESTELLTEN GEGENSTAND BEHALTEN WIR UNS ALLE RECHTE VOR. VERVIELFALTIGUNGEN, BEKANNTGABE AN DRITTE ODER VERWENDUNG SEINES INHALTS SIND OHNE UNSERE AUSDRUECKLICHE ZUSTIMMUNG VERBOTEN

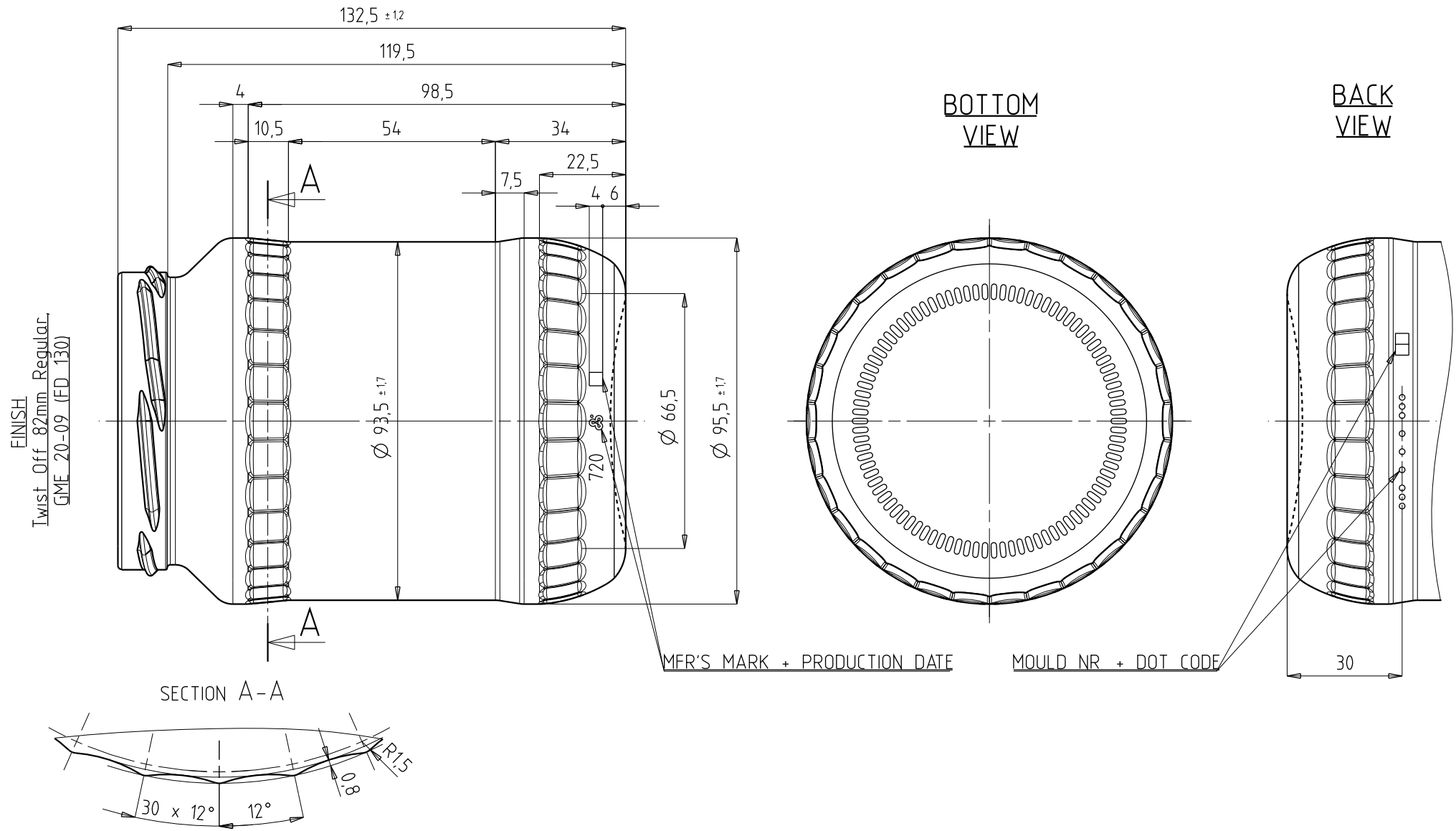

INDEX	ZMENY / modifications	DAT	JMENO
B	Form Nr and Dot code reposition, H-tol increased	23 1 08	Zap
C	Rename	14 3 17	Pam

SOUHLAS TECHNOLOGA PT approved		DAT	VIS
SOUH VYRTYMU FtB approved	VYRZAVOD VMG	DAT 14 03 17	VIS PRE
	VYRZAVOD	DAT	VIS
FS SOUHLAS FS approved	VYRZAVOD	DAT	VIS

NETOLEROVANE ROZMERY
DLE DIN 6129

dimensions without tolerances conform to standard DIN 6129

TEPLOTA PLNENI Filling temperature	≤ 20 °C
TEPLOTA ZPRACOVANI Conditioning temperature	≤ 95 °C
OBSAH CO_2 CO_2 content	≤ g/l
OBSAH ALKOHOLU Alcohol content	≤ Vol%
AXIALNI ZATIZENI Axial pressure	100 daN
POUZITI Disposal	MW / AW / EW X
PROCES Process	BB / PB X / EPB

NOMINAL OBJEM Capacity fillpoint	ml ± ml
TOTAL OBJEM Capacity brimful	720 ml ± 15 ml
HMOTNOST Approx glass weight	305 g
STREDNI TLOUSTKA STENY Average wall thickness	2,74 mm
PRUMER POD USTIM Neck connection dia	75 mm
VNITRNI PRUMER KALIBRU Min through bore	mm
BARVA Color	WE

POZNAMKA Remarks	
ZAKAZNIK Customer	
PODOBNY JAKO Similar to	
NAHRAZUJE Replace No	5N015 0720 6064_B
NABIDKA CISLO Offer No	E5N0107 0720 6064_A
MERITKO Scale	1 1 2 1
KRESLIL Des	Pam
DAT	14 03 17
DATA TYP Filetyp	AZ

vetropack
Vetropack Moravia Glass a s
CZ-69701 Kyjov
Tel 00420-518 603 111
www vetropack com

VMG-0701-01-FOR-006-CZ/EN

POZNAMKA Designation
FACETA 305g TO82RH 720ml
JF FACET 305

VYROBEK CISLO Item No
5N015 0720 6064

INDEX C

Date: 03-Jul-17 Time: 09:54 Message: Vetropack to SAP released drawing: Original is archived at the designoffice